TWOMASTER

Load Break Switches
40-3200A

IEC

www.twomaster.com.tr

manages the energy

TWOMASTER LBS Series

Product Description

LBS series isolation switch adopts modular design structure and glass fiber reinforced unsaturated polyester resin casing. It is high dielectric property, protective value and safe operation.

The operation mechanism is a spring-accumulating and accelerating instant-release device, which makes instant making and breaking of the double gap contact.It is no relationship with the speed of operation handle.

The product have been obtained 3C certificate.

Product Code

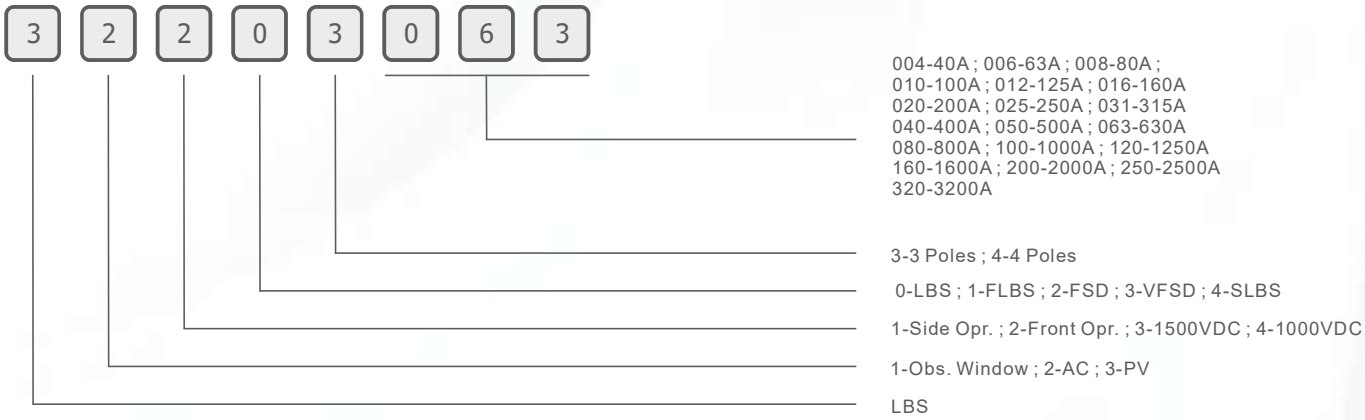

Characteristics

- Spring-storage instantaneous release of the mechanism to speed up the realization of the rapid marking and breaking (13.8 m / s), and it is nothing to do with the operation handle speed, and have greatly improved the capability of extinguish electric arc.
- The glass fiber reinforced unsaturated polyester resin casing have excellent flame resistance, dielectric, resist carbonic and resist impact performances.
- Parallel double gap contact possesses self-cleaning functions.
- All the contact materials are copper alloy plated with silver, and possess two separation contact surfaces.
- Large clearance of insulation.
- When it is "0" position, the product can lock the handle with three locks at the same time, and it can avoid error operation.

TWOMASTER LBS Series

General

LBS series load isolation switch is applicable for AC 50Hz, rated voltage AC 690V and below, DC 440V and below, rated current up to 3200A.It can be applied for manually infrequent making and breaking.

Standard

IEC 60947-1(2001)

IEC 60947-3(2005)

GB/T14048.1-2006

GB/T14048.3-2008

Operation Environment

- Altitude not exceed 2000m
- Temperature: -5° C~+ 40°C, Relative humidity not more than 95%
- No explosive dangerous medium environment
- No rain and snow attack environment

Note: If the load isolation switch is expected to be used in the condition that the ambient temperature is higher than +40°C or is lower than -5°C~45°C, customers should inform to the manufactory.

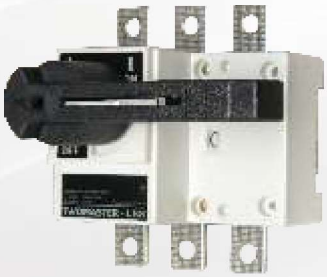

Performance Faeature

- 7 specifications of LBS series load isolation switch from 40A to 3200A is basic model of modularized design type, have 3 poles and four poles (3 poles + on and off neutral pole). It is mainly applied for making and breaking, and switches over 1000A are only suitable for electric isolation.
- The mark window is in the front to indicate the on and off state.
- Two group of auxiliary contacts can be assembled.
- The electric cable insulating cover can be assembled.

LBS Series

LBS-40A-3200A Electrical Properties And Mechanical Properties

Rated thermal current Ith			63A		100A		160A	
Rated current Ith			40	63	80	100	125	160
Rated insulation voltage Ui(V)			750	750	750	750	750	750
Dielectric strength (V)			5000	5000	5000	5000	5000	5000
Rated impulse withstand voltage Uimp kV (Installed category IV)			6	6	6	6	8	8
Rated working current Ie(A)	380V	AC-21	40	63	80	80	125	160
		AC-22	40	63	80	80	125	160
		AC-23	40	50	80	80	125	160
	690V	AC-21	40	50	80	80	125	160
		AC-22	32	32	50	50	125	160
		AC-23	25	25	40	40	80	80
	220V	DC-21	32	63	80	100	125	125
		DC-22	40	63	80	80	125	125
		DC-23	40	63	63	63	125	125
	440V	DC-21					100	125
		DC-22					100	125
		DC-23					100	125
Motor power P(380V) kW		380V	18.5	25	40	40	63	80
		690V	22	22	33	33	75	75
Rated short-time withstand current Icw (kA Rms) 0.1S/1S			10/5	10/5	10/5	10/5	10/20	10/20
Rated breaking capacity Icn(A Rms) AC23 380V			320	504				
Rated marking capacity Icm(A Rms) AC23 380V			400	630				
Rated short-circuit making Icm(kA)capacity			7.5	7.5				
Mechanical life (operation cycle times)			10000	10000	10000	10000	10000	10000
Electrical life (operation cycle times) Rated voltage Ue=690V		COSΦ=0.95 AC 21	1700	1700	1700	1700	1500	1500
		COSΦ=0.65 AC 22	100	100	100	100	1000	1000
		COSΦ=0.35 AC 23	500	500	500	500	500	500
Operation torque(Nm)			1.2	1.2	1.2	1.2	6.5	6.5
Weight(Kg)		3 poles	0.37	0.37	0.37	0.37	1.3	1.3
		4 poles	0.41	0.41	0.41	0.41	1.5	1.5

LBS Series

LBS-40A-3200A Electrical Properties And Mechanical Properties

250A		630A				1600A			3200A		
200	200	315	400	500	630	1000	1250	1600	2000	2500	3200
750	750	1000	1000	1000	1000	1000	1000	1000	1000	1000	1000
5000	5000	8000	8000	8000	8000	10000	10000	10000	10000	10000	10000
8	8	12	12	12	12	12	12	12	12	12	12
200	250	315	400	500	630	1000	1250	1600	2000	2500	3200
200	250	315	400	500	630	1000	1250	1600	2000	2000	3200
200	250	315	340	425	536						
200	250	315	400	400	500	1000	1000	1600	2000	2500	2500
160	160	315	315	315	315	800	800	800	1000	1000	1000
100	125	125	125	125	125						
200	250	315	400	500	630	1000	1250	1600	2000	2500	2500
200	250	315	400	400	500	1000	1250	1250	1600	1600	1600
160	200										
160	200	315	400	400	500	1000	1250	1250	2000	2000	2000
160	200	315	400	400	500	1000	1250	1250	1250	1250	1250
160	200	315	400	400	500	1000	1000	1000			
100	132	160	220	280	315	560	560	560	710	710	710
90	110	185	185	185	185	475	475	475	750	750	750
12/30	12/30	45/20	45/20	50/25	50/25	90/50	90/50	90/50	90/50	90/50	90/50
1600	1600	2500	3200	3200	3200						
2000	2000	3150	4000	4000	4000						
17	17	30	30	40	40						
10000	10000	5500	5500	5500	5500	4000	4000	3000	2500	2500	2500
1500	1500	750	750	750	750	600	600	450			
1000	1000	500	500	500	500	400	400	300			
500	500	250	250	250	250	200	200	150			
10	10	14.5	14.5	14.5	14.5	37	37	60	60	60	60
2.2	2.2	4.3	4.3	4.7	4.7	10.5	10.5	16	25.5	25.5	31
2.6	2.6	5.4	5.4	6	6	13	13	20	37.5	37.5	51.5

TWOMASTER
manages the energy

LBS Series

LBS-40A-100A Load Isolation Switch

- 40A-100A is applied for the circuit making and breaking or electric insulation.
- 40A-100A three poles and four poles (three poles + on and off neutral pole)
- Two groups of auxiliary contacts can be assembled.
- Side operation and outside operation can be assembled.

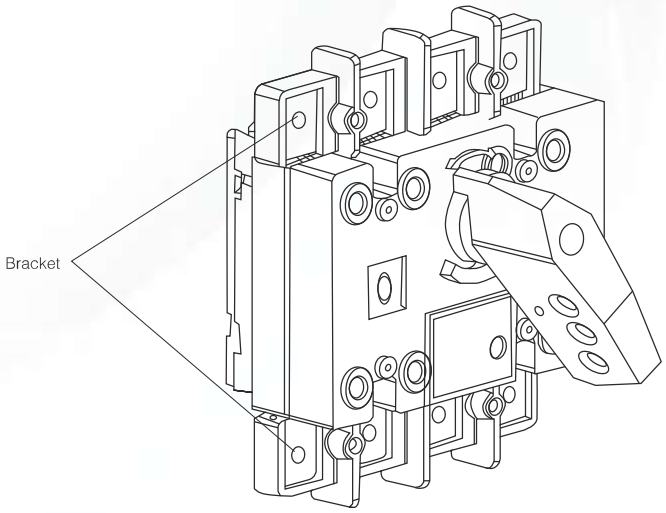

Note: It is RDGL–40A–63A load isolation switch without bracket.

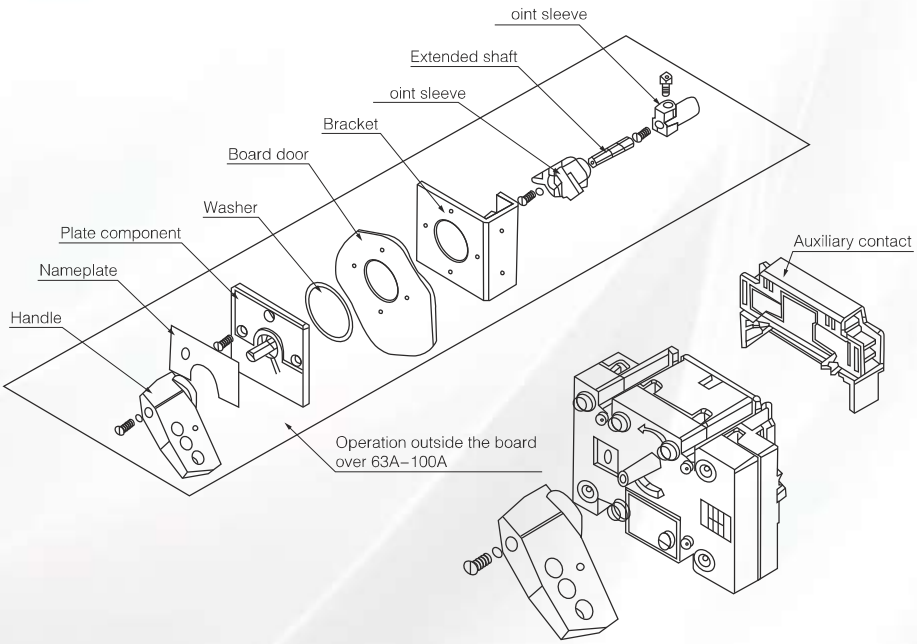

LBS Series

Operation Mode

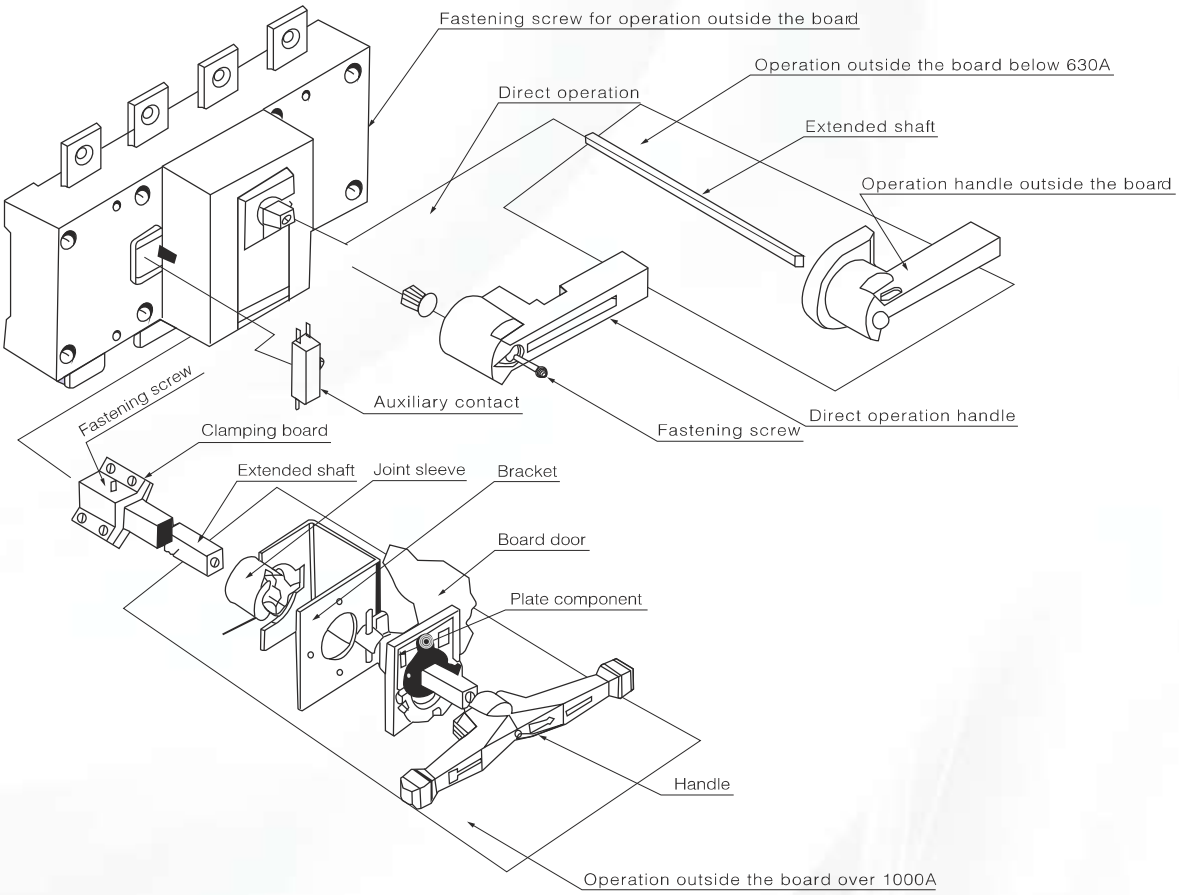

- Direct operation: Handle in the middle position.
- Operation outside: Handle in the outside of the board.

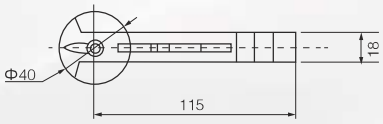

RDGL-160~250A/3.4
RDGL(Z)-160~250A/3.4(J)

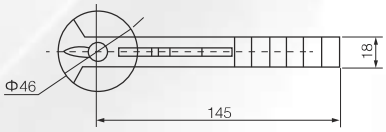

RDGL-630A/3.4
RDGL(Z)-630/3.4(J)

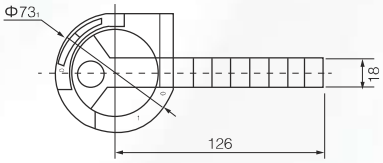

RDGL-160~630A/3.4J

TWOMASTER
manages the energy

LBS Series

LBS-40A-100A Overall And Mounting Dimensions (mm)

● LBS-40A Direct operation

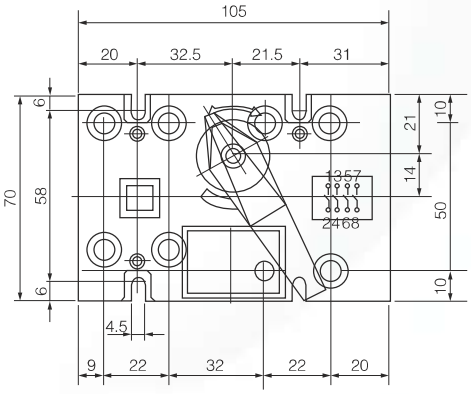

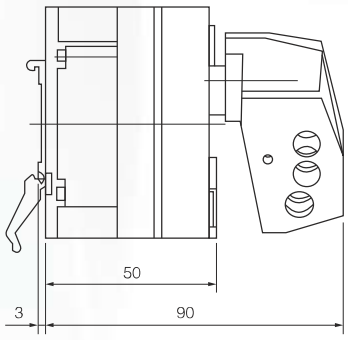

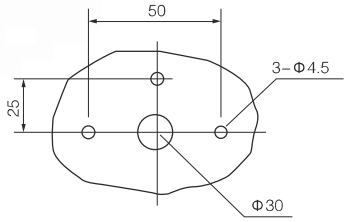

Installation size of operation outside the board

● LBS-100A Direct operation

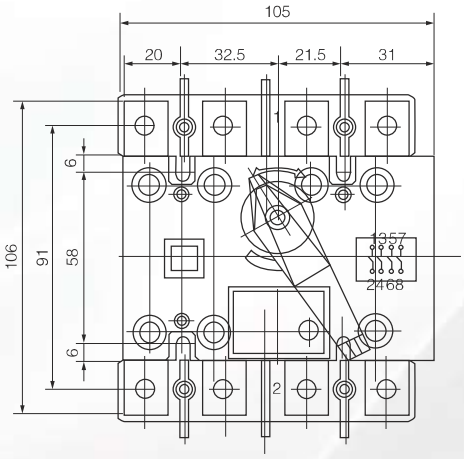

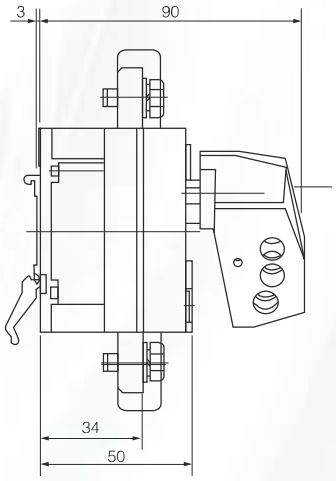

LBS Series

LBS-125A-630A Load Isolation Switch

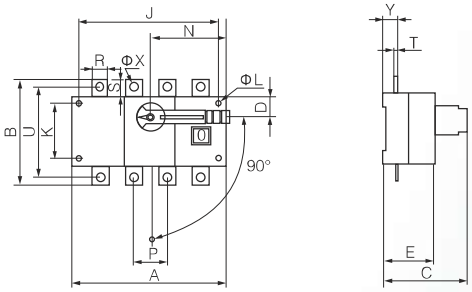

RDGL–125A–630A Direct operation

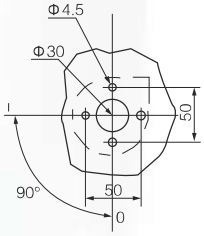

Installation size of operation outside board handle

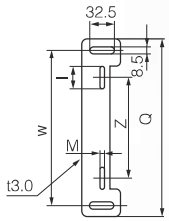

Installation bottom plate for operation outside the board

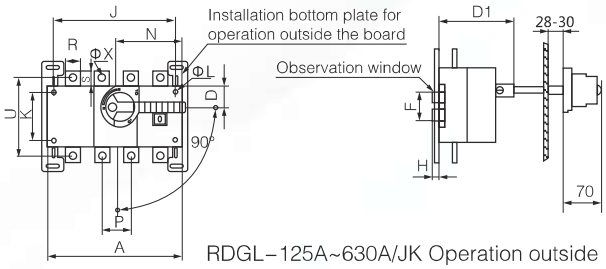

RDGL–125A~630A/JK Operation outside

Specification	Dimension of bottom plate				
RDGL-125A~630A	I	M	Z	W	Q
125A	55	5.5	85	190	218
160A	55	5.5	85	190	218
200A	55	5.5	85	190	218
250A	55	5.5	85	190	218
315A	60	6.5	130	240	270
400A	60	6.5	130	240	270
500A	60	6.5	130	240	270
630A	60	6.5	130	240	270

Specification	Overall and mounting dimensions																				
In	A	A1	B	C	D	D1	E	ΦL	J	J1	K	N	P	R	S	T	U	ΦX	Y	F	H
125A/3	140	50	135	92	27	92	73	5.5	120	120	65	85	36	20	25	3.5	85	9	24	52	10
125A/4	170	50	135	92	27	92	73	5.5	150	150	65	85	36	20	25	3.5	85	9	24	52	10
160A/3	140	50	135	92	27	92	73	5.5	120	120	65	85	36	20	25	3.5	85	9	24	52	10
160A/4	170	50	135	92	27	92	73	5.5	150	150	65	85	36	20	25	3.5	85	9	24	52	10
200A/3	180	60	170	103	35	104	83	5.5	160	160	90	115	50	25	30	3.5	110	11	25	79	13
200A/4	230	60	170	103	35	104	83	5.5	210	210	90	115	50	25	30	3.5	110	11	25	79	13
250A/3	180	60	170	103	35	104	83	5.5	160	160	90	115	50	25	30	3.5	110	11	25	79	13
250A/4	230	60	170	103	35	104	83	5.5	210	210	90	115	50	25	30	3.5	110	11	25	79	13
315A/3	230	85	240	134	50	133	113	7	210	210	140	145	65	30	40	5	160	11	36	100	24
315A/4	290	85	240	134	50	133	113	7	270	270	140	145	65	30	40	5	160	11	36	100	24
400A/3	230	85	240	134	50	133	113	7	210	210	140	145	65	30	40	5	160	11	36	100	24
400A/4	290	85	240	134	50	133	113	7	270	270	140	145	65	30	40	5	160	11	36	100	24
500A/3	230	85	260	134	50	133	113	7	210	210	140	145	65	40	50	6	160	12	36	100	24
500A/4	290	85	260	134	50	133	113	7	270	270	140	145	65	40	50	6	160	12	36	100	24
630A/3	230	85	260	134	50	133	113	7	210	210	140	145	65	40	50	6	160	12	36	100	24
630A/4	290	85	260	134	50	133	113	7	270	270	140	145	65	40	50	6	160	12	36	100	24

TWOMASTER
manages the energy

LBS Series

LBS-1000A-3150A Load Isolation Switch Overall And Mounting Dimensions (mm)

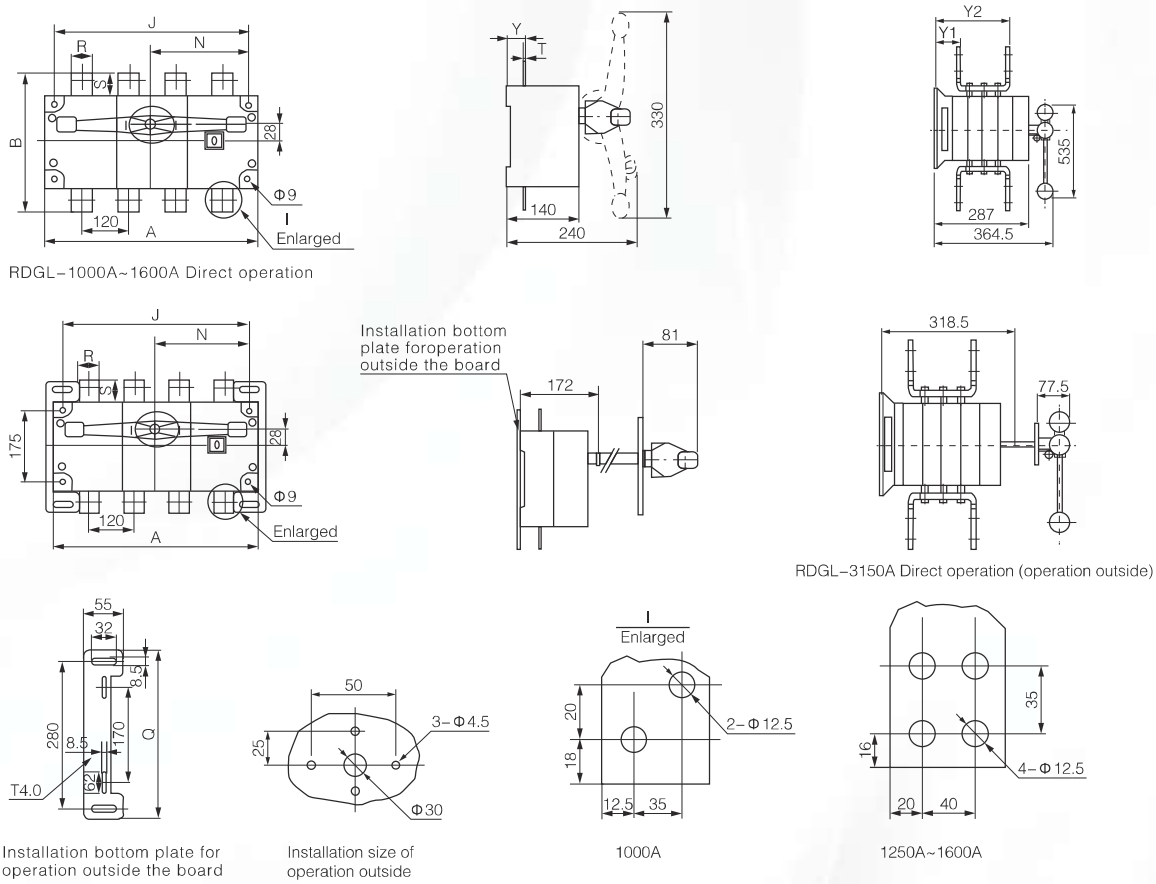

Specification	Overall and mounting dimensions																	
In	A	A1	B	D	E	F	G	J	J1	N	R	S	T	U	Y	Y1	Y2	Q
1000A/3	378	105	312					353	353	186	60	68	8	200	48			311
1000A/4	492	105	312					467	467	246	60	68	8	200	48			311
1250A/3	378	105	338	20	40	16	35	353	353	186	80	68	8	200	48			311
1250A/4	492	105	338	20	40	16	35	467	467	246	80	68	8	200	48			311
1600A/3	378	105	338	20	40	16	35	353	353	186	80	68	10	200	49			311
1600A/4	492	105	338	20	40	16	35	467	467	246	80	68	10	200	49			311
2000A/3	378		455	20	40	20	40	353	353	186	80	68	10	200		75.5	227.5	311
2000A/4	492		455	20	40	20	40	467	467	246	80	68	10	200		75.5	227.5	311
2500A/3	378		455	20	40	20	40	353	353	186	80	68	10	200		75.5	227.5	311
2500A/4	492		455	20	40	20	40	467	467	246	80	68	10	200		75.5	227.5	311
3200A/3	378		505	25	50	25	50	353	353	186	100	68	14	200		78	230	311
3200A/4	492		505	25	50	25	50	467	467	246	100	68	14	200		78	230	311

TWOMASTER

manages the energy

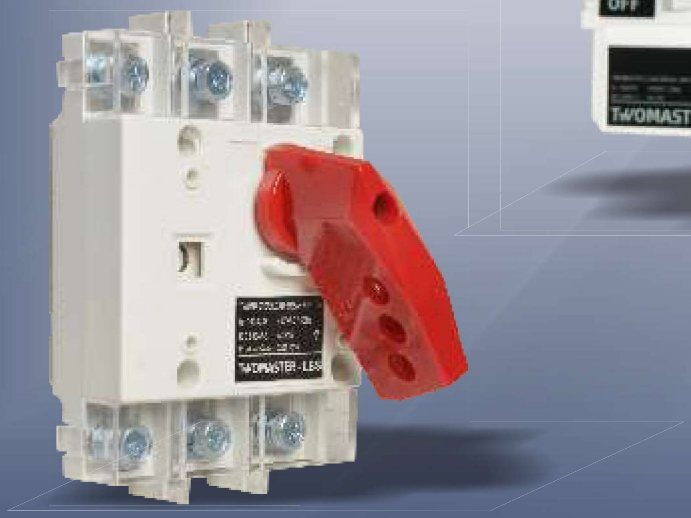

TWOMASTER LBS SERIES

TWOMASTER

manages the energy

ossa

manages the energy

İvedik OSB Melih Gökçek Bulvarı Eminel İş Merkezi
No:18/101 Yenimahalle / ANKARA / TÜRKİYE
Tel : +90 312 394 6772 / +90 312 394 OSSA
Fax : +90 312 394 6771
Email : info@twomaster.com.tr
Web : www.twomaster.com.tr